VECTORWORKS EDUCATIONAL VERSION

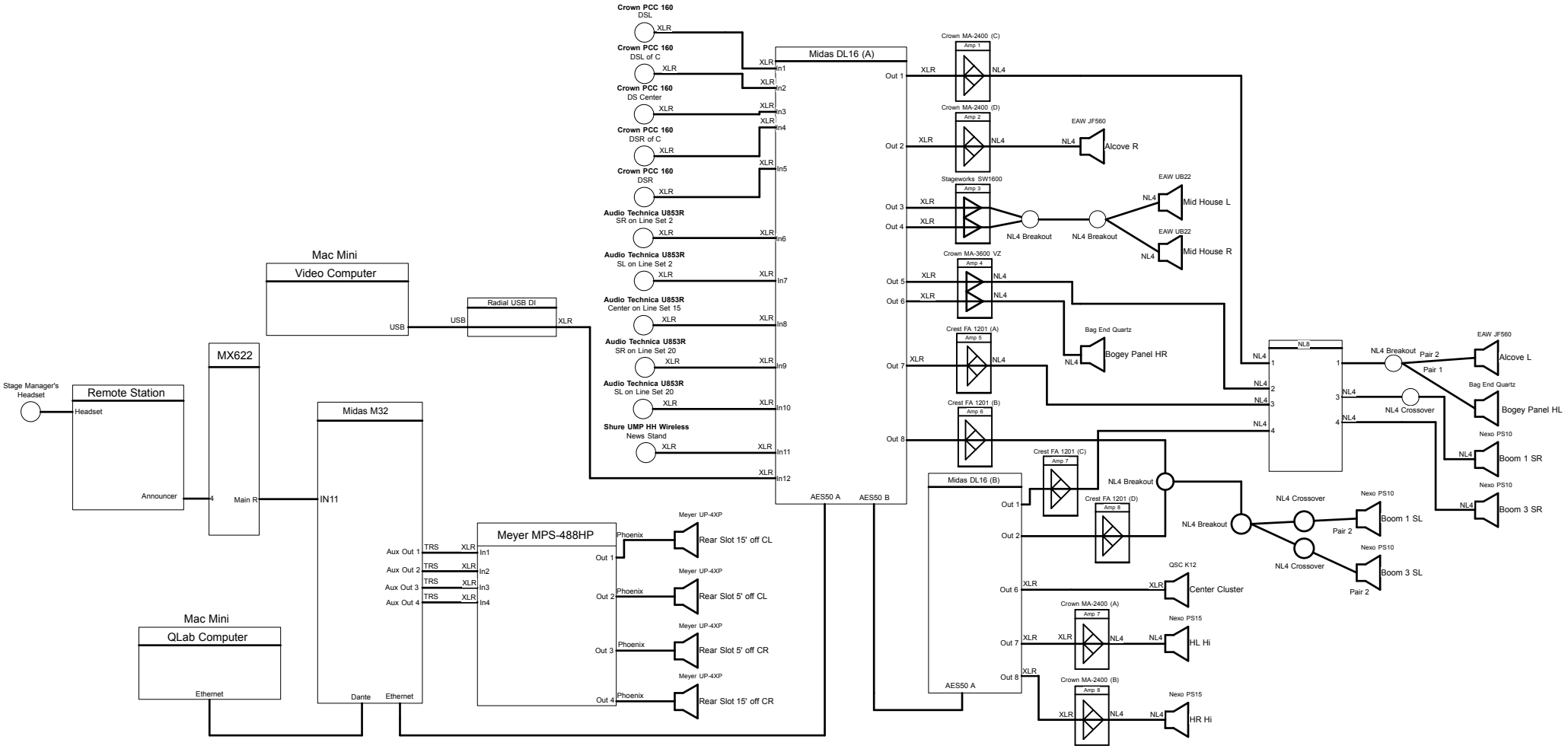

VECTORWORKS EDUCATIONAL VERSION